Vision Light Tech
creating optical solutions

Vision Light Tech B.V.
Protonenlaan 22, 5405 NE UDEN, P.O. Box 345, 5400 AH UDEN, The Netherlands
Phone: +31 (0)413 26 00 67, Fax +31 (0)413 26 09 38, E-mail: inquiry@vlt.nl, Website: www.vlt.nl
Trade register No. 17150044, VAT No. NL8112.30.946.B01

1inch format High Resolution Lenses

Item No.GMTHR412514MCN

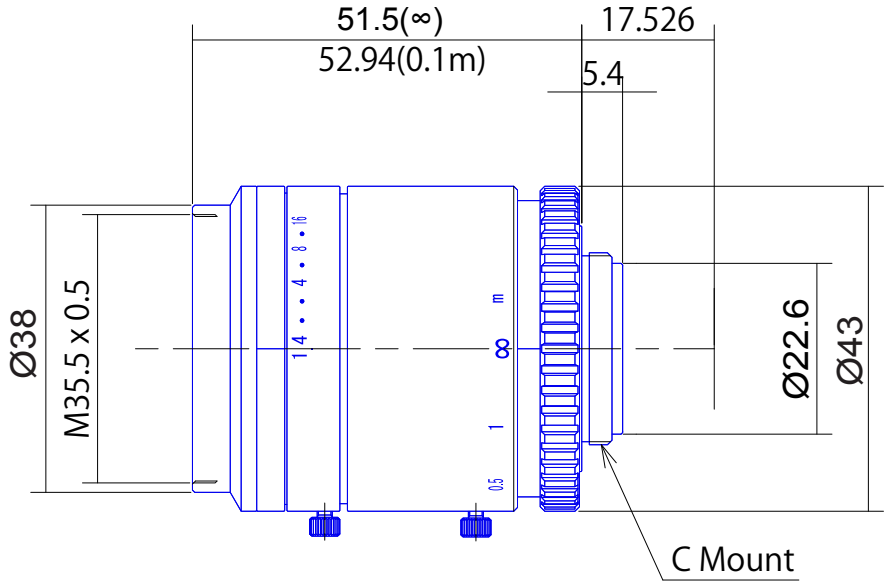

ITEM NO.		GMTHR412514MCN
Focal Length		12.7 (mm)
Iris Range		F1.44 - 16
Angle of View (Hx V x D)	1″	56.45° x 42.51° x 67.59°
MOD		0.1 (m)
Filter Thread		M35.5 , P=0.5
Dimention (D x L)		Ø43 x 52.94 (mm)
Weight		175 (g)

Vision Light Tech
creating optical solutions

Vision Light Tech B.V.
Protonenlaan 22, 5405 NE UDEN, P.O. Box 345, 5400 AH UDEN, The Netherlands
Phone: +31 (0)413 26 00 67, Fax +31 (0)413 26 09 38, E-mail: inquiry@vlt.nl, Website: www.vlt.nl
Trade register No. 17150044, VAT No. NL8112.30.946.B01